SIZE: 92x92x25mm

Bearing Type:

Ball / Sleeve Bearing

Leader Wire Or Terminal Is Available

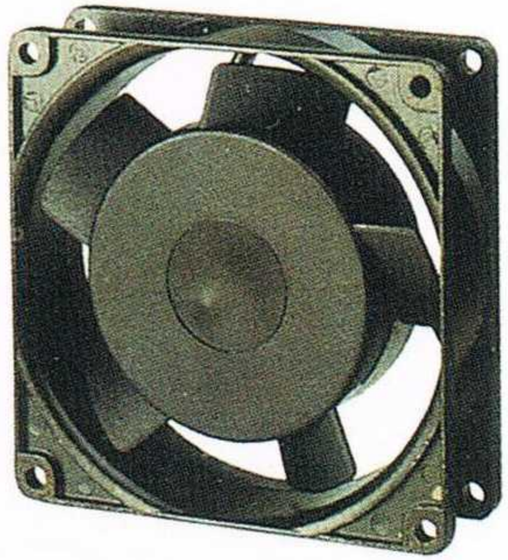

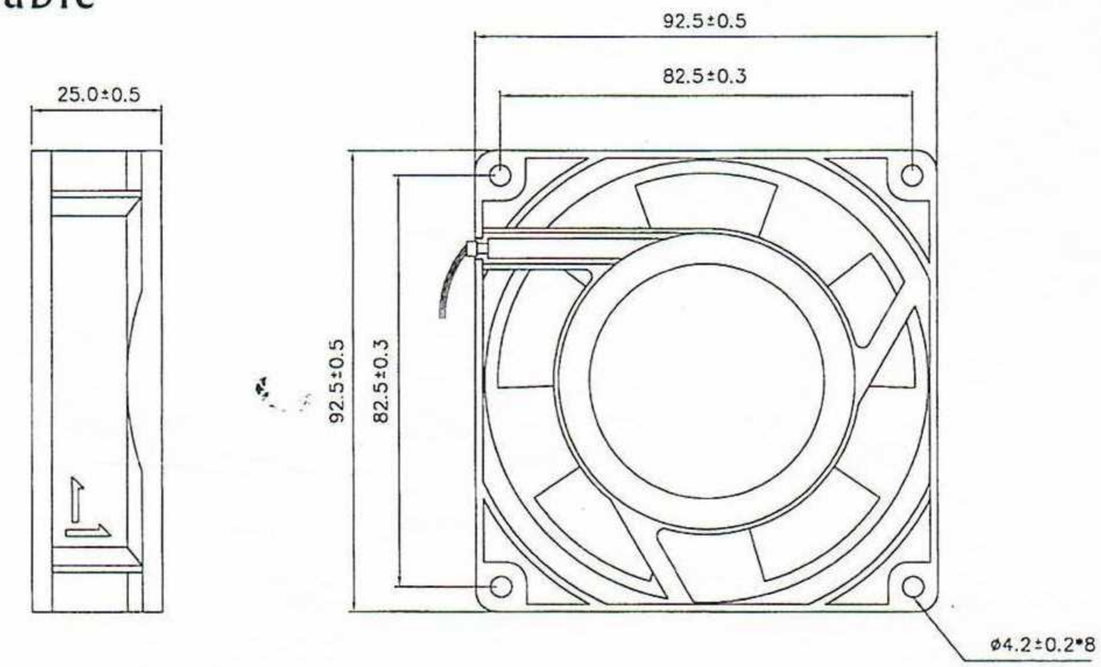

Specifications

Specifications are subject to change without notice

Model No.	Bearing	Rated Voltage Vac	Frequency Hz	Max. Input Current mA	Max. Input Power W	Speed R.P.M.	Max. Air Flow CFM	Max. Air Pressure IN H_2O	Noise dB-A
KA9225HA1SAL KA9225HA1SAT KA9225HA1BAT	Sleeve Ball	115	50/60	0.11/0.10	20.7/18.4	2000/2400	28/34	0.066/0.094	24.1/30.1
KA9225HA2SAL KA9225HA2SAT KA9225HA2BAT	Sleeve Ball	230	50/60	0.07/0.06	19.3/17.3	2000/2400	28/34	0.066/0.094	24.1/30.1