SIZE: 80x80x25mm

Bearing Type:

Ball / Sleeve Bearing

Leader Wire Or Terminal Is Available

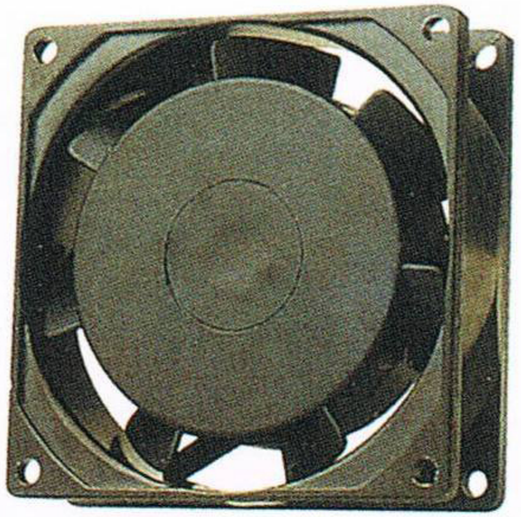

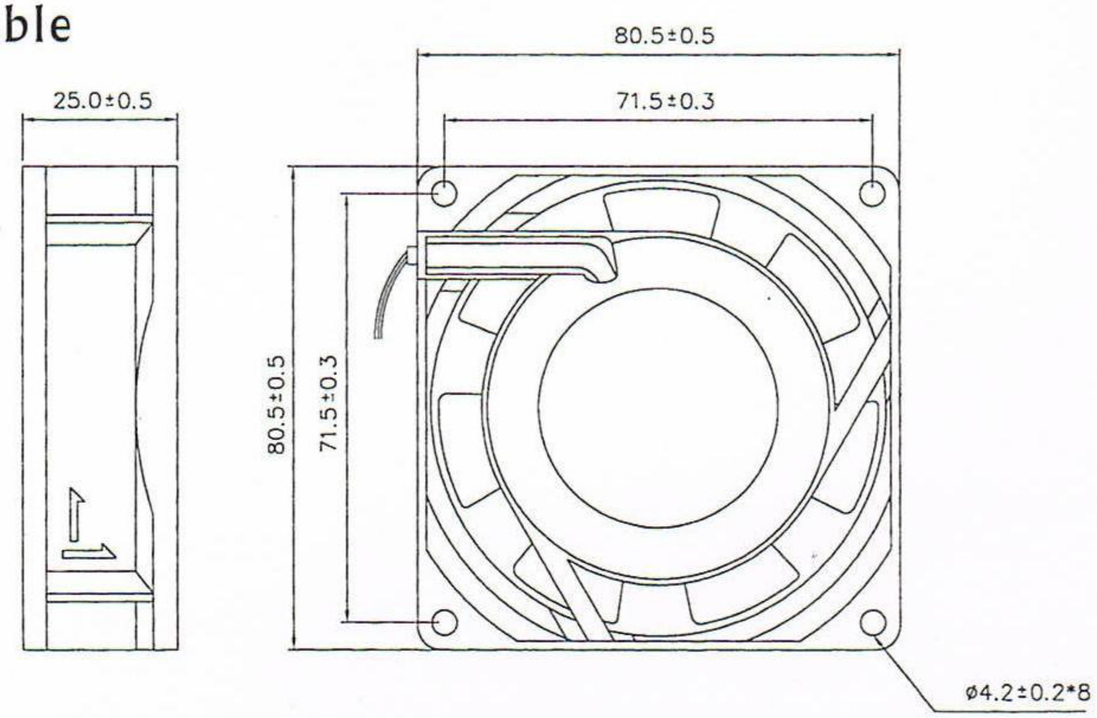

Specifications

Specifications are subject to change without notice

Model No.	Bearing	Rated Voltage Vac	Frequency Hz	Max. Input Current A	Max. Input Power W	Speed R.P.M.	Max. Air Flow CFM	Max. Air Pressure IN H_2O	Noise dB-A
KA8225HA1SAL KA8225HA1SAT KA8225HA1BAT	Sleeve Ball	115	50/60	0.15/0.13	20.7/18.4	2300/2800	16.8/21	0.097/0.125	21.2/27.8
KA8225HA2SAL KA8225HA2SAT KA8225HA2BAT	Sleeve Ball	230	50/60	0.07/0.06	19.3/17.3	2300/2800	16.8/21	0.097/0.125	21.2/27.8